A1RFRD10

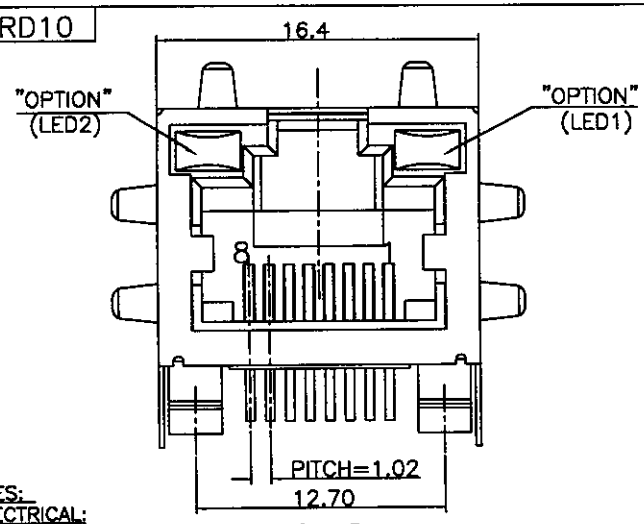


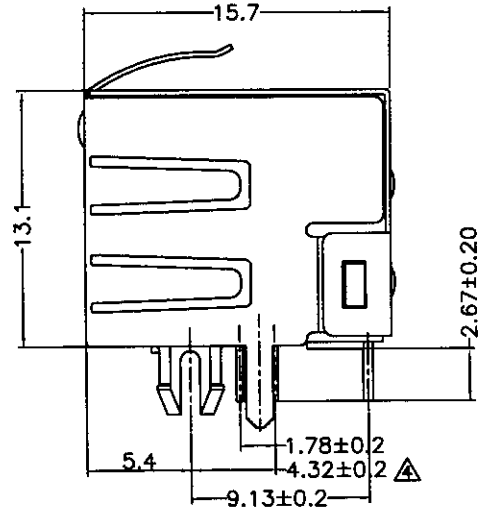


| | | | | | | | | |
|---|---|---|---|---|---|---|---|---|
| 8 | | ADD TYPE | lrondr 10/24/02 | | REVISION RECORD | | | |
| 9 | | DRAWING MODIFY | lrondr 10/24/02 | REV | ECO | DESCRIPTION | DRFT | CHKD |
| 10 | | ADD TYPE | SUHLL 06/21/04 | 1 | | EC NOTE & NUMBER | M.W.T. 4/11/01' | |
| 11 | | ADD TYPE | SUHLL 06/28/04 | 2 | | EC NOTE & NUMBER | MING-WEI 5/14/01' | |
| 12 | | ADD TYPE | PETERS 1/3/05 | 3 | | EC NOTE | MING-WEI 9/27/01' | |
| 13 | | ADD TYPE | PETERS 1/18/05 | 4 | | Modify Dimension | Chrlet 3/11/02' | |
| 14 | | DRAWING MODIFY | PETERS 01/25/05 | 5 | | ADD TYPE | lrondr 06/01/02 | |
| 15 | | DRAWING MODIFY | PETERS 04/23/05 | 6 | | DRAWING MODIFY | lrondr 06/17/02 | |
| 16 | | ADD TYPE | YuM 05/27/05' | 7 | | ADD TYPE | lrondr 10/22/02 | |

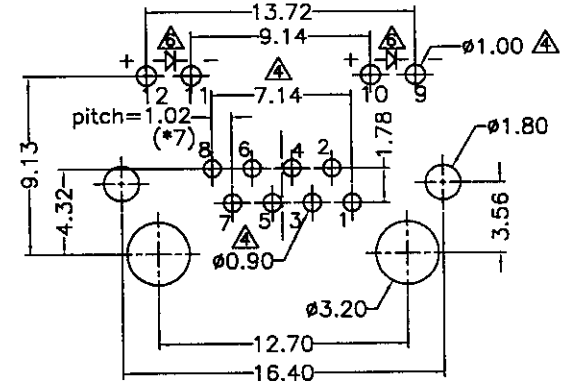


PC Board (t=1.60mm) Layout

Component Side Shown

NOTES:

ELECTRICAL:

1. VOLTAGE RATING : 1.5 AMP.
2. CURRENT RATING : 125 VAC RMS.
3. CONTACT RESISTANCE : 30 MILLIOHMS MAX.
4. INSULATION RESISTANCE: 1000 MEGOHMS MIN @ 500 VDC.
5. DIELECTRIC STRENGTH : 1000 VAC RMS 60Hz, 1MIN.
6. LED RATINGS: FORWARD VOLTAGE: 2.2 VOLTS TYPICAL.
   REVERSE VOLTAGE: 5 VOLTS MAXIMUM. 6
7. OPERATING: 750 CYCLES MIN.

MECHANICAL:

1. HOUSING MATERIAL : PBT+30%.G.F OR FR52 UL94V-0. COLOR-BLACK.
2. INSERT MATERIAL : PBT+30%GF OR FR52 UL94V-0. COLOR-BLACK.
3. BACK PLATE MATERIAL : PBT+30%GF. OR FR52 COLOR-BLACK.
4. LED SIZE : 3.2*2.0*4.0*P=2.54mm. 8
5. SHIELD MATERIAL : COPPER ALLOY 0.25mm THICKNESS PLATING NI.
6. CONTACT MATERIAL : PHOSPHOR BRONZE 0.35mm THICKNESS OR ø0.46mm.
7. PLATING : GOLD PLATING OVER NICKEL.
8. PCB RETENTION PRE-SOLDER : 1 LB MIN.
9. PCB RETENTION POST-SOLDER: 10 LBS MIN.

ENVIRONMENTAL:

1. STORAGE : -40°C TO +85°C.
2. OPERATION : -40°C TO +85°C.
3. 3 SOLDER DIP : 245± 5°C(3~5 SEC).

MATES WITH MODULAR PLUG CONFORMING TO
FCC PART 68, SUBPART F.
CUL FILE NO. E163191

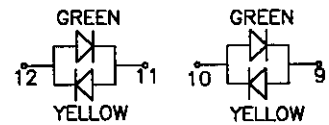


7 FOR P/N:E5J88-4XLOXX

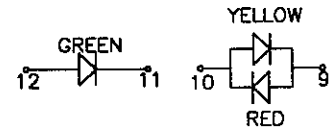


6 FOR P/N:E5J88-PXLOXX

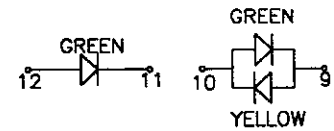


10 FOR P/N:E5J88-KXLOXX

10 PART NUMBER: E 5J 8 8 - X X L X X X

1-LED1:GREEN ,LED2:YELLOW .
2-LED1:GREEN ,LED2:GREEN .
3-LED1:YELLOW ,LED2:GREEN .
12 4-LED1:G+Y ,LED2:G+Y .
5-LED1:RED ,LED2:GREEN .
7-LED1:YELLOW ,LED2:YELLOW .
5 K-LED1:G+Y ,LED2:GREEN
6 P-LED1:Y+R ,LED2:GREEN
11 E-LED1:GREEN ,LED2:RED.

PLATING:1-3u" 2-6u" 3-15u" 4-30u" 5-50u"

C-"LED TYPE" TIN LEAD SHIELD STAMPED PIN.
D-"LED TYPE" NI LEAD SHIELD STAMPED PIN.
10 J-"LED TYPE" NI LEAD SHIELD ROUND PIN.
K-"LED TYPE" TIN LEAD SHIELD ROUND PIN.
0-W/O LOGO W/ TINNED SHIELD LEGS
5-W/O LOGO W/O TINNED SHIELD LEGS
13 J-W/O LOGO A05-0130

1-NO TAB
2-TOP TABS.
3-SIDE TABS.
4-TOP TABS & SIDE TABS.

| | | | |
|---|---|---|---|
| MM (INCH) | DFTD JERRY | DATE 8/15/2000 | FULL RISE ELECTRONIC CO., LTD |
| TOLERANCES EXCEPT AS NOTED | CHKD | DATE | |
| MM .0 ± 0.20 ± | MFG | DATE | TITLE |
| .00 ± 0.15 ± | APPVL | DATE | RJ45 SIDE ENTRY LED JACK |
| .000 ± 0.075 ± | MATERIAL : | | |
| ANGLES ± | QT'Y : | | DRAWING NO. GE5J3A03 / PART NO. SEE NOTE — SIZE A3 — REV 16 |
| THIRD ANGLE PROJECTION | FINISH : | | |
| | SCALE : | | DO NOT SCALE DRAWING — SHEET 1 OF 1 |

DETACHED LISTS