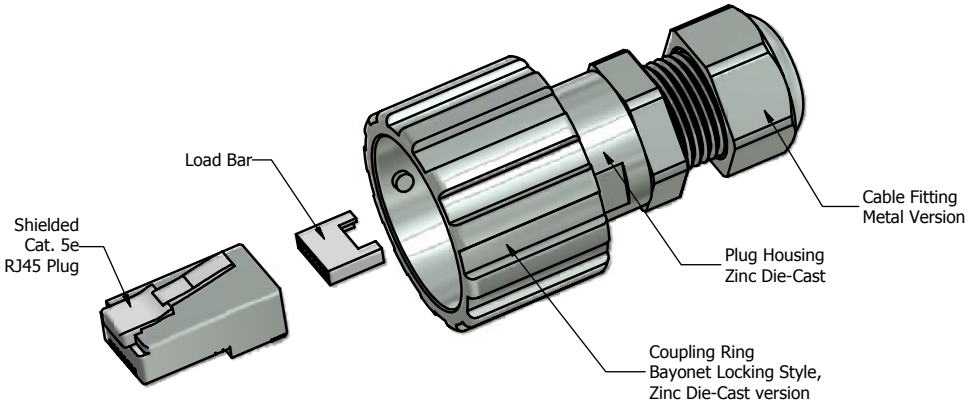

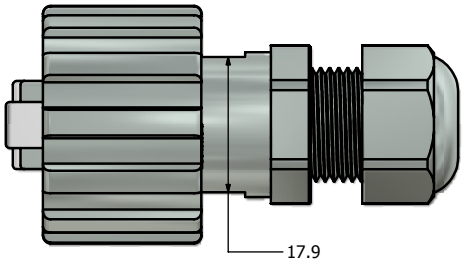

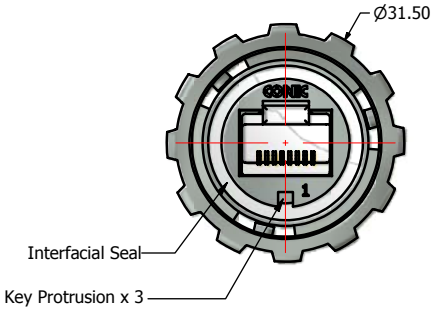

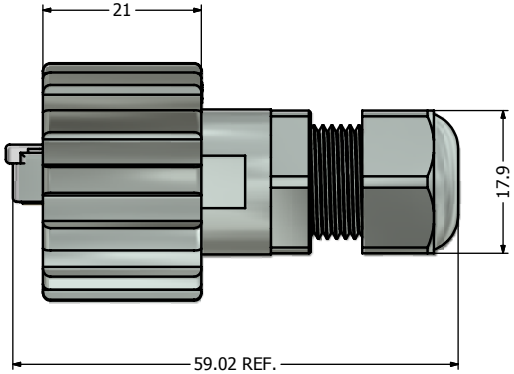

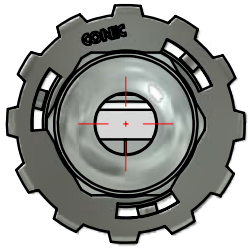

Notes:

1. Electrical Specifications:
   - Meets EIA/TIA-568-B.2 Cat.5e Specification
   - Contact Resistance: 20mOhm max.
   - Insulation Resistance: 500MOhm min. @ 100 VDC
   - Current Rating: 1.2A max. at 25˚C
   - Working Voltage: 100 VDC
   - DWV: 1000 VDC/60s Contact to Contact, 1500 VDC/60s Contact to Metal Shell
   - Operating Temperature: -40˚C to +85˚C
2. Material and Finish:
   - Coupling Ring and Plug Housing: Zinc Die-Cast, Nickel Plated
   - Interfacial Seal: Silicon, Color: White
   - Cable Fitting: Brass, Nickel Plated
   - Cable Fitting Rubber Ring: NBR, Color: Black
   - RJ45 Plug Metal Shell: Copper Alloy, Nickel Plated
   - (d) RJ45 Plug Plastic Housing: Clear Polycarbonate UL94 V-2
   - RJ45 Plug Contacts: Phosphor Bronze, Finish: 50u" Gold min. over Nickel
3. RJ45 Plug accepts both Stranded and Solid Cables with Outer Diameter of 4.83mm to 6.73mm
4. Metal Cable Gland accepts Cable Outer Diameter Range of 4.5mm to 8mm
5. IP67 rated when fully mated with the appropriate mating connector
6. RoHS compliant

Directive 2002/95/EC RoHS Compliant

THIS DRAWING MAY NOT BE COPIED OR REPRODUCED IN ANY WAY, AND MAY NOT BE PASSED ON TO A THIRD PARTY WITHOUT WRITTEN PERMISSION. OWNERSHIP AND COPYRIGHT OF CONEC CORPORATION

DO NOT ALTER CAD DRAWING BY HAND

Customer:

Name	Title	Approval Date

Rev.	Changes	Date	Name
d		Jul/06/2011	Vincent ke
c	1 x c	Mar/02/2011	Vincent ke
b	3 x b	Dec/16/2010	Vincent Ke
a	original		

Tolerance
Unless otherwise specified
0 PLC ±0.50
1 PLC ±0.38
2 PLC ±0.25
3 PLC ±0.10
ANGLES ±3°

2009	Date	Name
Draw.	Dec. 07	Vincent Ke
Appd.	Dec. 07	J. Chaudry
Norm		
D-old		

Autodesk Inventor

CONEC®

Scale: NTS

Dim. in mm

Material: See Notes

Title: RJ45 Plug Kit
with shielded Cat. 5e RJ45 Plug
Nickel Plated Zinc Die-Cast Version

Drawing No.: 17K1A147 (c)

DIN A3

Part No.: 17-101794

Sheet 1/1