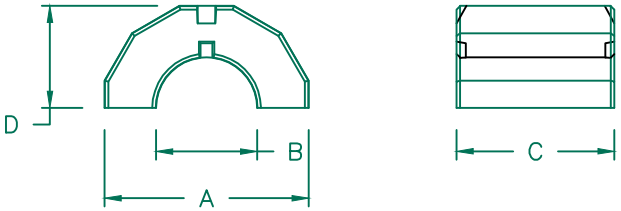

UNCONTROLLED DOCUMENT

IMPEDANCE (Z)			
Frequency	25 MHz	100 MHz	300 MHz
Nominal (REF)	187 Ω	425 Ω	533 Ω
Minimum	- Ω	340 Ω	- Ω

Z vs. FREQUENCY
(REF. ONLY)

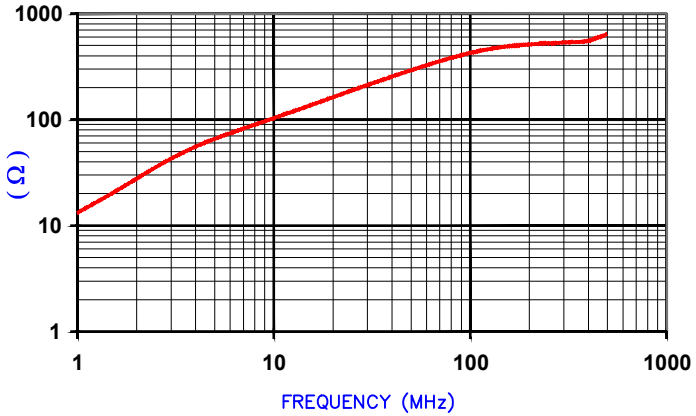

AGILENT E4991A Impedance/Material Analyzer
HP 16092A-Test Fixture. TEST REF. 5108

CORE DIMENSIONS:

A	51.31 [2.020]	±	0.77 [.030]
B	25.40 [1.000]	±	0.38 [.015]
C	39.67 [1.562]	±	0.77 [.030]
D	25.65 [1.010]	±	0.30 [.012]

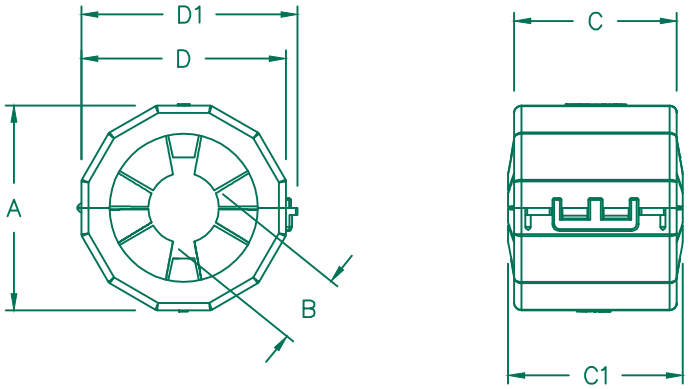

NOTES:

1. ASSEMBLED PART #: 28A5131–0A2
2. CASE COLOR: BLACK–0A2.
3. CASE FLAMMABILITY RATING: UL94 V–0.
4. CASE MATERIAL: Halogen Free Nylon
5. COSMETIC SPECIFICATION REFER TO WI–QA–038.

CASE DIMENSIONS:

A	56.64 [2.230]	±	REF.
B	19.50 [.768]	±	REF.
C	45.00 [1.772]	±	REF.
C1	48.34 [1.903]	±	REF.
D	56.63 [2.230]	±	REF.
D1	59.83 [2.356]	±	REF.

DIMENSIONS ARE IN mm [INCHES].

REV	DESCRIPTION	DATE	INT
F	UPDATE COMPANY LOGO , ADD NOTE 5	08/23/14	QIU
E	UPDATE COMPANY LOGO ADD NOTES 3&4	01/26/09	JRK
D	UPDATE 100MHz MINIMUM VALUE	07/17/07	TMB
C	UPDATE COMPANY LOGO	04/17/07	TMB
B	CHANGE CASE TOLERANCES TO REF. REMOVE CORE & CASE P/N REFERENCE REMOVE ISO VIEW AND NOTES "2" & '3"	10/18/06	TMB
A	ORIGINAL DRAFT	09/13/05	TMB

This print is the property of Laird Tech. and is loaned in confidence subject to return upon request and with the understanding that no copies shall be made without the written consent of Laird Tech. All rights to design or invention are reserved.

Laird

PROJECT/PART NUMBER:	REV	PART TYPE:	DRAWN BY:
28A5131–0A2	F	FERRITE SNAP–ON	TMB
DATE: 09/13/05	SCALE: N.T.S.	MATERIAL: Ferrite	
CAD # 28A5131–0A2–F	TOOL # –		