DWG. SIZE	DWG. NO.
D	031–8149

REVISIONS

SYM.	E.C.N.	DATE	APVD.
C	23388	5/6/97	
	REVISED & UPDATED		

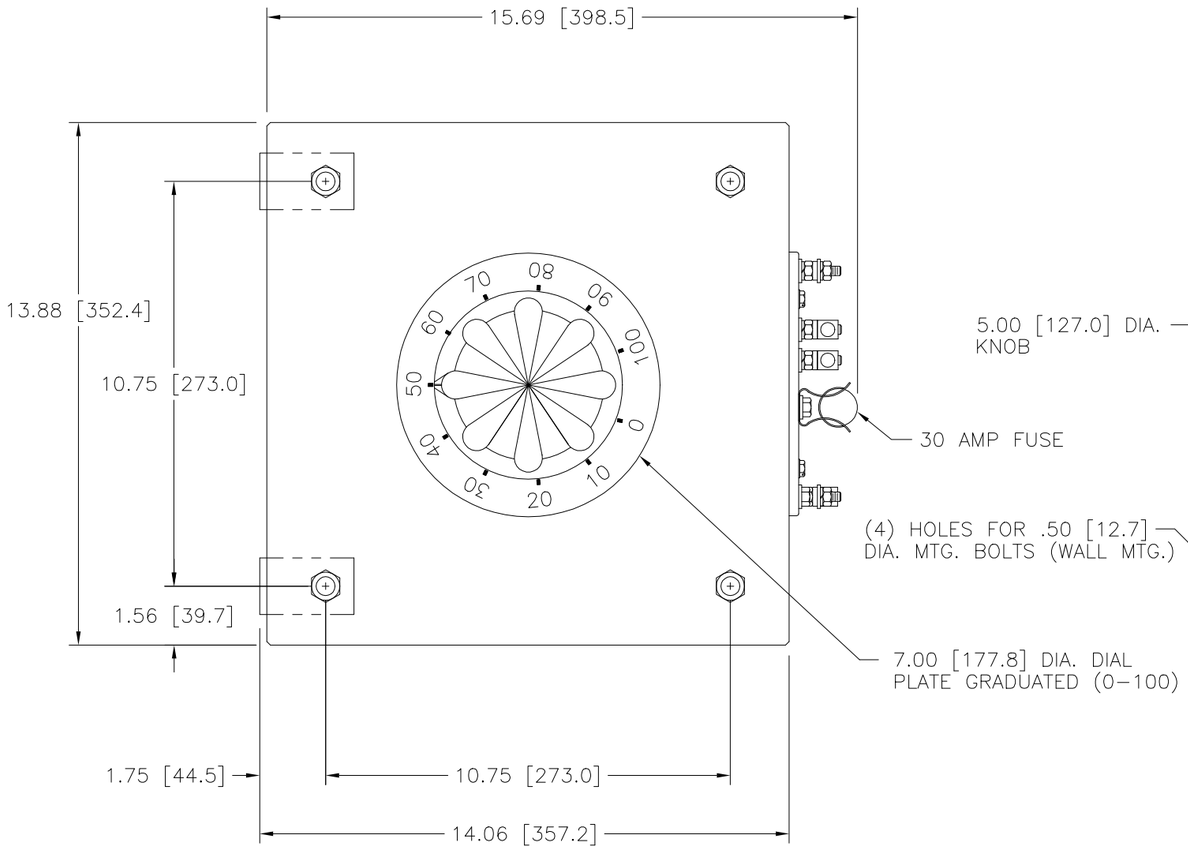

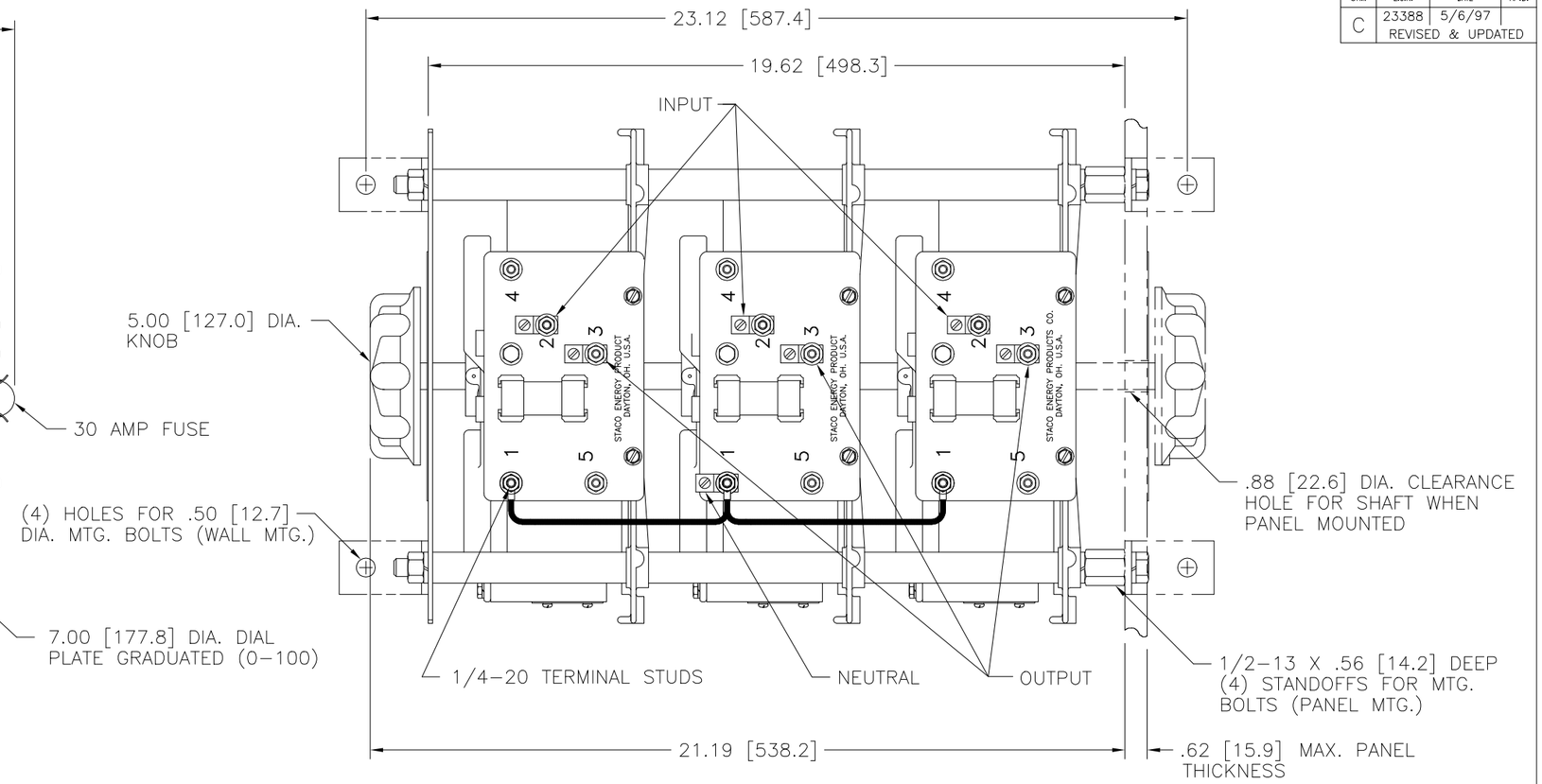

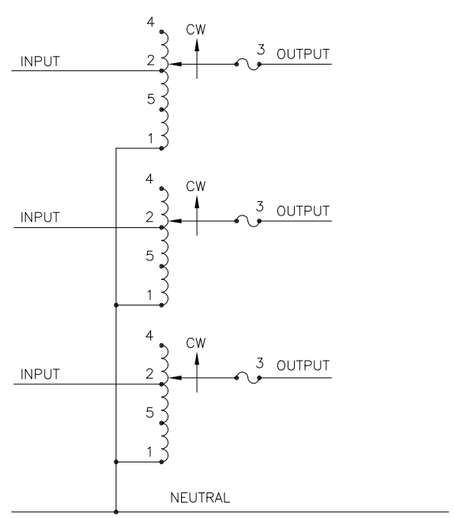

SCHEMATIC

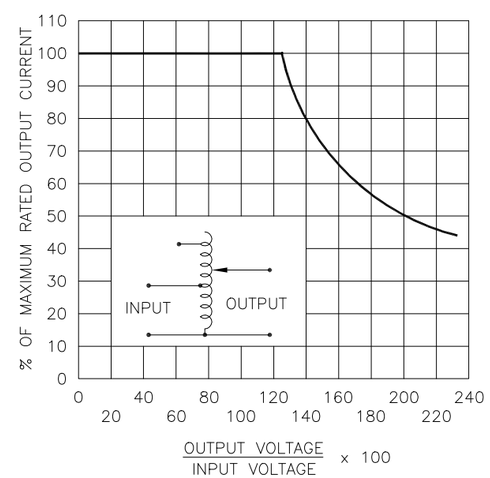

FIGURE A

MAXIMUM OUTPUT CURRENT OF ANY DUAL INPUT VOLTAGE OR VOLTAGE DOUBLER UNIT OPERATED AT LOWER INPUT VOLTAGE.

* MAXIMUM OUTPUT CURRENT IN OUTPUT VOLTAGE RANGE FROM 0 TO 25 PERCENT ABOVE LINE VOLTAGE. AT HIGHER OUTPUT VOLTAGES, OUTPUT CURRENT MUST BE REDUCED ACCORDING TO RATING CURVE (SEE FIGURE A).

++ MAXIMUM KVA AT MAXIMUM OUTPUT AND CORRESPONDING DE–RATED CURRENT. MAXIMUM KVA AT LOWER OUTPUT VOLTAGES MAY BE CALCULATED FROM RATING CURVE, (SEE FIGURE A).

V.D. = VOLTAGE DOUBLER.

SPECIFICATIONS

WIRING	INPUT VOLTS	INPUT HERTZ	OUTPUT VOLTS	OUTPUT MAX. AMPS	OUTPUT MAX. KVA	SHAFT ROTATION TO INCREASE VOLTAGE	TERMINAL CONNECTIONS FOR INCREASING VOLTAGE AS VIEWED FROM ROTOR END: INPUT	JUMPER	OUTPUT
THREE PHASE WYE	480	50/60	0–480	28	23.3	CW	4–4–4	———	3–3–3
		60	0–560	28	27.2	CW	2–2–2	———	3–3–3
	240	60	0–560	28*–12 V.D.	11.8 ++	CW	5–5–5	———	3–3–3

UNLESS OTHERWISE SPECIFIED. TOLERANCE IS ±
DECIMALS .XX ±.010 .XXX .005 — HOLES .06 .002 — ANGLES 1° — DRAFT 1–1/2°
UNITS IN [mm]
MATERIAL
ALL DIMENSIONS APPLY AFTER PLATING

TITLE: SPEC. CONTROL DRAWING VARIABLE CONTROL DRAWING TYPE: 5021–3Y

STACO ENERGY PRODUCTS CO. A COMPONENTS CORPORATION OF AMERICA COMPANY DAYTON, OHIO U.S.A.

The information and design disclosed herein was originated by and is the property of STACO ENERGY PRODUCTS CO., which reserves all patent, proprietary, design, manufacturing, reproduction, use and sale rights thereto, and to any article disclosed therein except to the extent rights are expressly granted to others. The foregoing does not apply to vendor proprietary parts.

DRAWN BY	DATE	FIRST USED ON	DO NOT SCALE DWG.	CUSTOMER APPROVAL	DATE
TIM RAU	5/6/97				
CHECKER	DATE	WEIGHT APPROX. 240 LBS.	CODE IDENT. NO. 83008	DWG. SIZE D	DWG. NO. 031–8149
ENGINEER	DATE	SCALE .5=1	SHEET 1 OF 1		